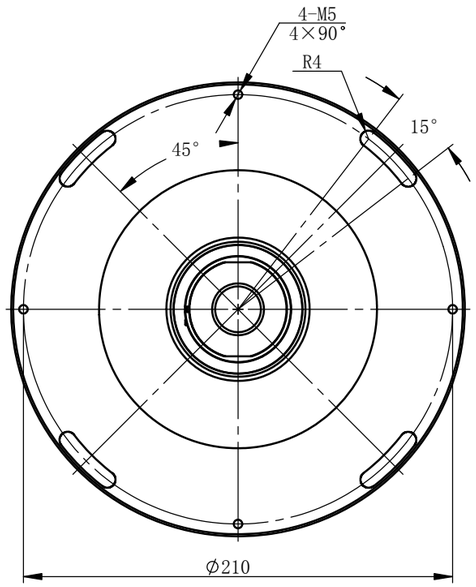

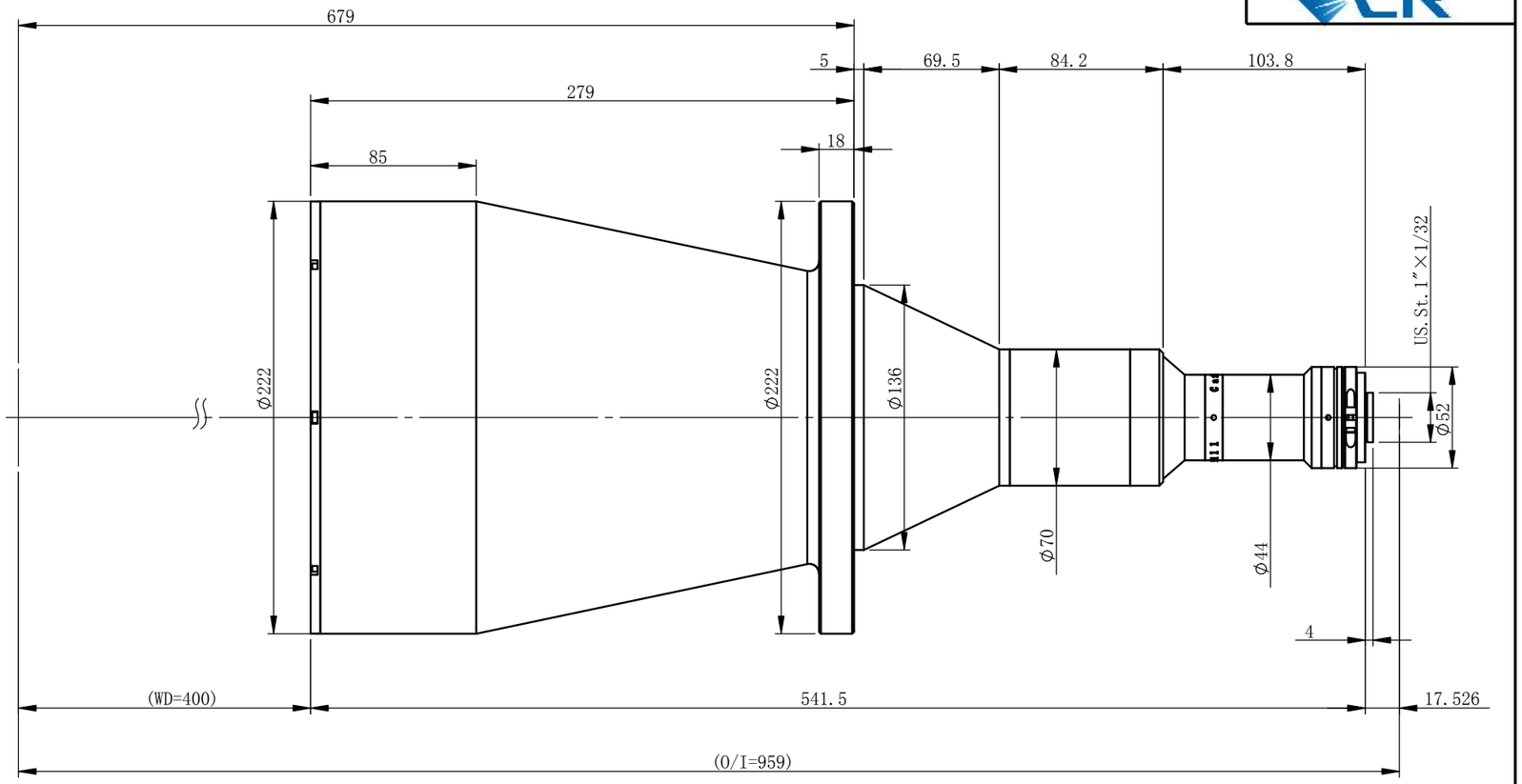

XF-PTL19523-C

Specification

Optical structure	Bi-Telecentric
Magnification	0.119
Object field of view	Φ193.3mm
Image field of view	Φ23mm
Working Distance	400mm±3%
Telecentricity	<0.04°(0.06°)
Depth of field	61.9mm
F#	F8
Resolution	44.25μm
MTF	>0.3@130lp/mm
Distortion	<0.038%(0.099%)
Detector type:	
4/3' 18×13.5	151.3×113.4mm
1.1' 14.2×10.4	119.3×87.4mm
1' 12.8×9.6	107.6×80.7mm
2/3' 8.45×7.07	71.0×59.4mm
2K Linear scan 2048×10μm	172.1mm

XF-PTLAAABB-C/F/P/M-(L90E)

- The fourth generation lens of Canrill
- Object FOV
- Image FOV
- The camera mount (M & P mount need specify BFL)
- 90° Steering option

Undefined tolerance(mm)		degree	File Name		
X.X	±0.2	±30min	XF-PTL19523-C-外形尺寸-EN		
X.XX	±0.02		Drawing Name		
X.XXX	±0.005	Drawing Size: A3			
	Sign	Data/Ver.	Material	Ratio	Product Name
Design				1:5	
Modify1			Qty		Canrill OPTICS
Modify2			Total:	Page:	

All design and drawings are intellectual property of Canrill Optics, can not be copied without Canrill's authorization.