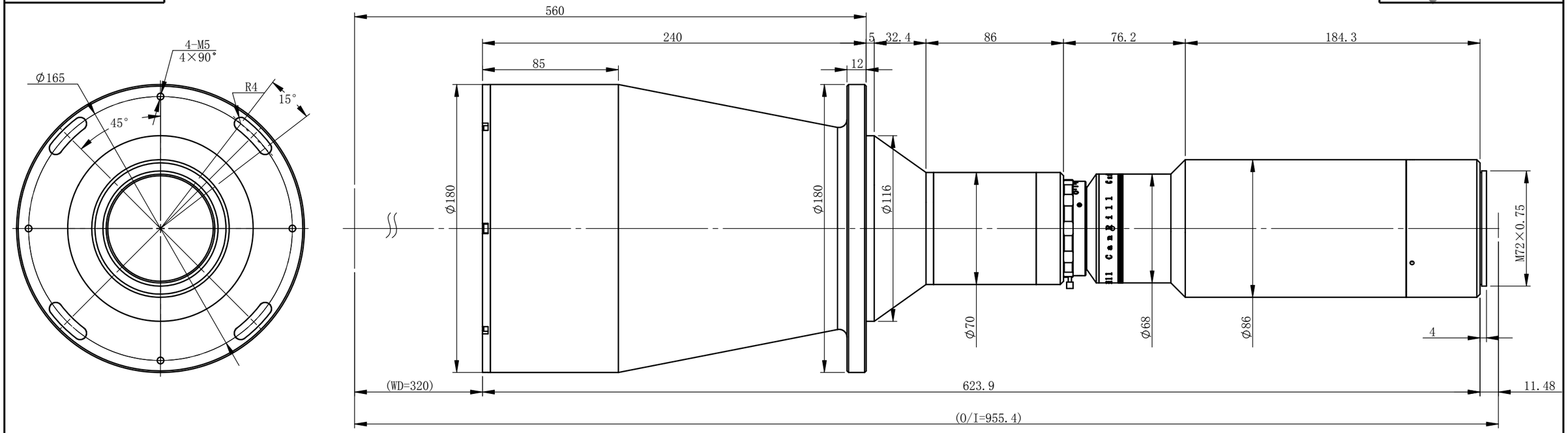

XF-PTL15257-M72-11.48-VI

Optional camera mount
1、M58×0.75
2、M72×0.75

Specification

Optical structure	Bi-Telecentric
Magnification	0.391
Object field of view	Φ146.8mm
Image field of view	Φ57.4mm
Working Distance	320mm±3%
Telecentricity	<0.04°(0.06°)
Depth of field	7.9mm@F11
F#	F6-F76
Resolution	18.6μm@F11
MTF	>0.3@95lp/mm@F11
Distortion	<0.032%(0.090%)
Detector type:	
35film 36×24	92.1×61.4mm
2' 23×23	58.8×58.8mm
4/3' 18×13.5	46.0×34.5mm
1.1' 14.2×10.4	36.3×26.6mm
2K Linear scan 2048×10μm	52.4mm
4K Linear scan 4096×7μm	73.3mm
8K Linear scan 8192×5μm	104.8mm
8K Linear scan 8192×7μm	146.7mm

XF-PTLAAABB-C/F/P/M-(L90E)

- **The fourth generation lens of Canrill**
- **Object FOV**
- **Image FOV**
- **The camera mount (M & P mount need specify BFL)**
- **90° Steering option**

Undefined tolerance(mm)		degree	File Name		
X.X	±0.2	±30min	XF-PTL15257-M72-11.48-VI-外形尺寸-EN		
X.XX	±0.02		Drawing Name		
X.XXX	±0.005	Drawing Size: A3			
	Sign	Data/Ver.	Material	Ratio	Product Name
Design				1:5	
Modify1			Qty		Canrill OPTICS
Modify2			Total:	Page:	

All design and drawings are intellectual property of Canrill Optics, can not be copied without Canrill's authorization.